Instructions for use

HOME DELUXE
WIR MACHEN DEIN ZUHAUSE

WANGEROOGE Deluxe bathroom furniture

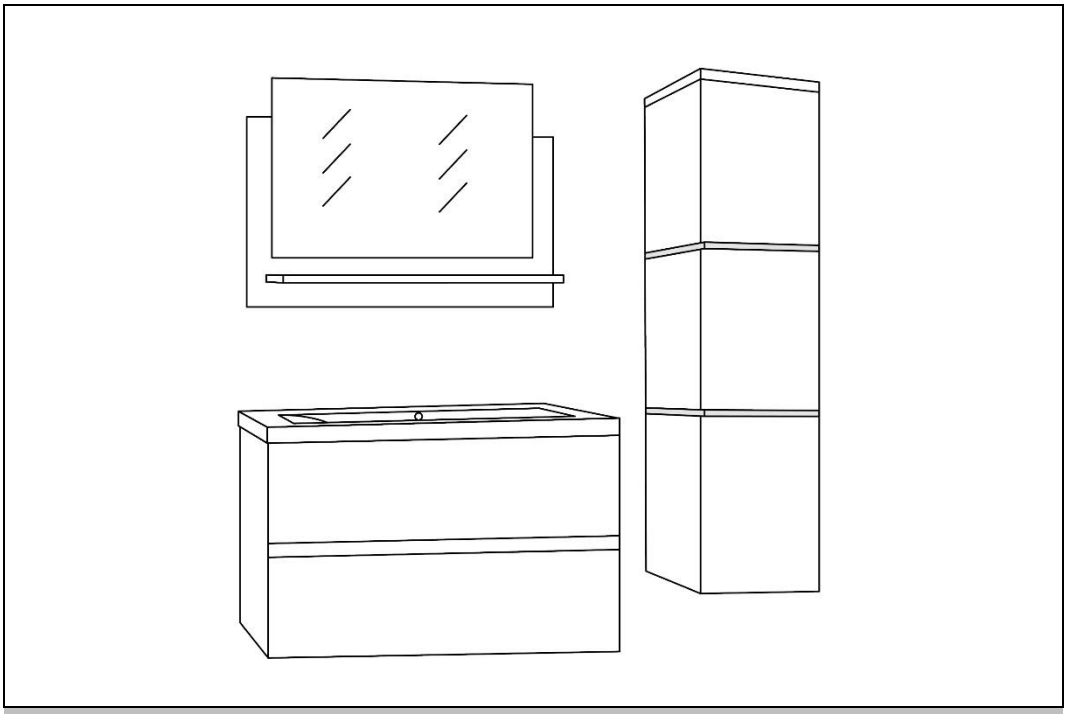

Original instructions for use

DESIGNED IN GERMANY

IMPORTANT:
KEEP FOR FUTURE REFERENCE.
READ CAREFULLY!

Table of contents

1. General information ... 3
1.1. Product overview ... 3
1.2. General notes ... 4
1.3. Guarantee ... 4
2. Information on the instructions for use ... 4
2.1. Availability of the instructions for use ... 4
2.2. Target groups of the instructions for use ... 4
2.3. Information on the translation ... 4
2.4. Explanation of symbols ... 5
2.5. General information on the instructions for use ... 5
2.6. Intended use ... 6
2.7. General safety instructions ... 6
3. Product features ... 8
3.1. Technical data ... 8
3.2. Product description ... 9
4. Scope of delivery ... 9
5. Assembly ... 16
5.1. Safety instructions ... 16
5.2. Structure of the product ... 16
6. Application ... 37
6.1. Safety instructions ... 37
6.2. Initial commissioning ... 37
6.3. Operation ... 37
6.4. Control element ... 37
7. Troubleshooting ... 38
8. Maintenance and care ... 38

8.1. Safety instructions 38
9. Dismantling 39
9.1. Safety instructions 39
10. Disposal instructions 39
11. Electrical and electronic equipment - Information for private households 40

Dear customer,

Thank you for choosing a product from **Home Deluxe GmbH**. We hope you enjoy your new WANGEROOGE Deluxe bathroom furniture.

The instructions for use support you in the installation, commissioning, operation and maintenance of the product. The instructions for use and the safety instructions must be read carefully and in full. Observe these instructions to avoid hazards.

1. General information

1.1. Product overview

Model	Item ID: White	Item ID: Black
WANGEROOGE Deluxe S	21984	21985
WANGEROOGE Deluxe M	21986	21987
WANGEROOGE Deluxe L	21988	21989
WANGEROOGE Deluxe XL	21990	21991
WANGEROOGE BIG Deluxe S	21993	21994
WANGEROOGE BIG Deluxe M	21995	21996
WANGEROOGE BIG Deluxe L	21997	21998
WANGEROOGE BIG Deluxe XL	21999	22000
	Variant ID: White	**Variant ID: Black**
WANGEROOGE Deluxe S	55749	55750
WANGEROOGE Deluxe M	55751	55752
WANGEROOGE Deluxe L	55753	55754
WANGEROOGE Deluxe XL	55755	55756
WANGEROOGE BIG Deluxe S	55761	55762
WANGEROOGE BIG Deluxe M	55763	55764
WANGEROOGE BIG Deluxe L	55765	55766
WANGEROOGE BIG Deluxe XL	55767	55768

1.2. General notes

In order to fulfil our claim, we are constantly improving quality, simplifying installation and operation and adapting the products to customer requirements. Due to these changes, the current version of the instructions for use can be found on our homepage.

The term "product" is used in the instructions for use for the "WANGEROOGE Deluxe bathroom furniture".

1.3. Guarantee

The statutory liability for defects and warranty rights apply from the date of purchase.
Home Deluxe GmbH accepts no liability for damage caused by non-compliance with the instructions for use. Complaints arising from improper installation or use are excluded from the warranty. In the event of defects in the product, please contact our customer service in writing using the contact form on our homepage, stating the product name, serial number and a photo of the type plate:

Home Deluxe GmbH
Schanzeweg 2
32312 Lübbecke
Germany
Tel: +49 (0)5743 6181-0
www.home-deluxe-gmbh.de

If you have any further questions, please contact our customer service team using the contact form.

2. Information on the instructions for use

2.1. Availability of the instructions for use

The instructions for use are part of the product and should be kept complete and in the immediate vicinity of the product.

2.2. Target groups of the instructions for use

The instructions for use must be read and observed by every person involved in one of the following activities or uses:

- Unpacking
- Assembly / Installation
- Commissioning / Operation
- Maintenance / inspection / care
- Troubleshooting / repair
- Waste disposal

2.3. Information on the translation

The original instructions for use were written in German. Any other language available is a translation of the German version.

2.4. Explanation of symbols

Symbol	Explanation of symbols
	**WARNING** The symbol indicates possible dangers that could result in fatal or serious injuries. Before carrying out the corresponding installation or application step, read the corresponding note.
	**INFO** The symbol provides important information and indicates material damage. Observe these before carrying out the corresponding installation or application step in order to understand problems and avoid damage.
	**CE labelling** The symbol declares the conformity of the product with the applicable requirements of the European Community. The current declaration of conformity is available on request from Home Deluxe GmbH.
	**Read instructions for use** The symbol indicates that the operating instructions must be read carefully before mounting/installing and/or operating the appliance.
	**For indoor use only** The symbol indicates that the product may only be used indoors.
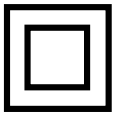	**Protection class II** The symbol indicates that the equipment has reinforced or double insulation to the level of the rated insulation voltage between active and touchable parts. They usually have no connection to the protective conductor.
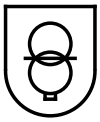	**Safety transformer** The symbol indicates that a short-circuit-proof closed safety transformer is installed.
	**Disposal of electrical and electronic appliances** Electrical and electronic appliances must not be disposed of with household waste!

2.5. General information on the instructions for use

The instructions for use refer to the WANGEROOGE Deluxe bathroom furniture. It contains important information on assembly and operation. The instructions for use, in particular the safety instructions, must be read carefully before using the product; keep the instructions for use in a safe place. Only use the product as described in these instructions for use to avoid accidental injury or damage. If you pass the WANGEROOGE Deluxe bathroom furniture on to a third party, these instructions for use must also be handed over.

2.6. Intended use

The product is of high quality, durable and intended or suitable exclusively for private use to a reasonable and customary extent. Furthermore, our product is **not** intended for commercial use. Commercial use is only permitted with the written authorisation of Home Deluxe GmbH

The product is intended as a washing facility and for storing bathroom utensils indoors.

Only use the WANGEROOGE Deluxe bathroom furniture as described in these instructions for use. Any other use is considered improper and may result in damage to property or personal injury. The manufacturer accepts no liability for damage caused by improper or incorrect use.

2.7. General safety instructions

General hazard warnings



- Improper handling can lead to considerable personal injury and damage to property. For this reason, assembly, installation, commissioning, troubleshooting, maintenance and repair work may only be carried out by qualified persons.
- The product can be used by children aged from 8 years and above and persons with reduced physical, sensory or mental capabilities or lack of experience and knowledge if they have been given supervision or instruction concerning use of the appliance in a safe way and understand the hazards involved.
- **Only** install the product if the scope of delivery is complete and in perfect condition.
- Ensure that all parts are undamaged and correctly installed. There is a risk of injury if they are not installed correctly. Damaged parts can affect safety and function.
- Only install the product on on-site walls that can permanently withstand the load.
- Do not make any changes to the product
- Check the fastening at regular intervals.

Danger for children



- Keep children away from packaging materials. There is a risk of suffocation!
- Keep children away from the assembly site while the product is being assembled. The scope of delivery contains small parts that can be swallowed or cause serious injury.
- **Danger of falling!** The product is not a children's toy, climbing wall or sports equipment. The individual elements of the product can fall off the wall if loaded on one side, which can result in death.
- Explain to the children how to handle the product correctly.
- Make sure that small children do not put small parts in their mouths.
- Do not let children play with the packaging material.

Risk of injury
Improper handling of the product can lead to injuries



- Check the product for visible damage before each use.
- Do not make any design changes to the product. Any modifications must be authorised in writing by the manufacturer and carried out in accordance with the instructions.
- If the product is damaged, it must no longer be used. Damaged parts must be repaired or replaced with original spare parts.

- Ensure that the product is permanently installed securely to avoid injury.
- To avoid the risk of electric shock, all installations and corresponding maintenance work must be carried out by a qualified electrician.
- If the mains cable for the power supply is damaged, take the product out of operation until the mains cable is replaced by the manufacturer, its customer service or a qualified electrician.
- During installation, make sure that the plug of the LED strip is disconnected from the power supply.
- **Danger to life due to electrical voltage**: There is an immediate danger to life if live parts are touched. Damage to the insulation or individual components can be life-threatening. -> If the insulation is damaged, switch off the power supply immediately and arrange for repairs.

Risk of damage



- Improper handling of the product can lead to damage.
- Repair and maintenance work on the electrical system may only be carried out by a qualified electrician.
- Do not open the packaging with sharp objects (e.g. knives, scissors or similar) as this may damage the product. Be careful when opening.
- If you open the packaging carelessly with a knife or other sharp objects, the product may be damaged. Be very careful when opening the packaging.
- Do not use the product near sources of heat or naked flames.
- **Risk of tipping and falling:** Do not climb onto the product as this may cause the connection to the wall on site to loosen and the product may fall.

Explosion hazard



Caution: Do not store highly flammable, combustible or explosive substances inside the product. inside the product. Highly flammable substances can catch fire.

3. Product features

3.1. Technical data

WANGEROOGE Deluxe	Base cabinet	Washbasin	Mirror (without shelf)	Wall cabinet
	(H x W x D) in mm			
S	310 x 610 x 415	40 x 610 x 415		
M	310 x 610 x 415	40 x 610 x 415	500 x 600 x 20	
L	310 x 610 x 415	40 x 610 x 415	500 x 600 x 20	1100 x 300 x 300
XL	310 x 610 x 415	40 x 610 x 415	500 x 600 x 20	1100 x 300 x 300

WANGEROOGE Deluxe	Base cabinet	Washbasin	Mirror (without shelf)	Wall cabinet
	(H x W x D) in mm			
BIG S	330 x 800 x 410	45 x 800 x 410		
BIG M	330 x 800 x 410	45 x 800 x 410	500 x 800 x 20	
BIG L	330 x 800 x 410	45 x 800 x 410	500 x 800 x 20	1100 x 300 x 300
BIG XL	330 x 800 x 410	45 x 800 x 410	500 x 800 x 20	1100 x 300 x 300

Power supply unit	
Input voltage	100 - 240 V AC
Frequency	50/60 Hz
Input current	0,2 A
Protection class	II
Output voltage	12 V DC
Output current	max. 500 mA
Output power	max. 6 W

LED light strip	
Nominal voltage	12 V DC
Rated current	75 mA
Rated power	> 1 W
Colour temperature	6500 K
Luminous flux	100 lm

This product contains a light source of energy efficiency class F.



3.2. Product description

The modern design of the "WANGEROOGE Deluxe" bathroom furniture set enhances the look of your bathroom. Depending on the order, our bathroom furniture set consists of a mirror with shelf, washbasin with washbasin base cabinet and two wall cabinets with LED lighting. The LED lighting in the wall cabinet creates an atmospheric ambience and a modern look. The set offers sufficient storage space for perfect organisation.

4. Scope of delivery

Check the packaging for external damage on delivery. Furthermore, immediately after unpacking, check that the scope of delivery is complete and that the product and all components are in perfect condition. Only assemble the product if the scope of delivery is complete and undamaged.

Executions

WANGEROOGE Deluxe S / BIG S:	Vanity unit with washbasin[1)]
WANGEROOGE Deluxe M / BIG M:	Vanity unit with washbasin[1)] / mirror with shelf
WANGEROOGE Deluxe L / BIG L:	Vanity unit with washbasin[1)] / wall unit / mirror with shelf
WANGEROOGE Deluxe XL / BIG XL:	Vanity unit with washbasin[1)] / 2x wall unit / mirror with shelf

1) The tap and drain are not included in the scope of delivery.

Base cabinet

No.	Part	Quantity
a		43
b		43
c	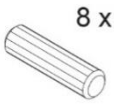	4

No.	Part	Quantity
d		8
e	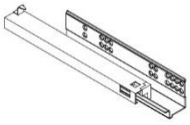	2
f	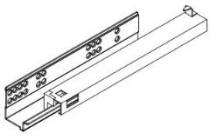	2

No.	Part	Quantity
g	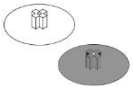	12
h	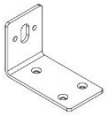	2
i	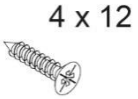	24

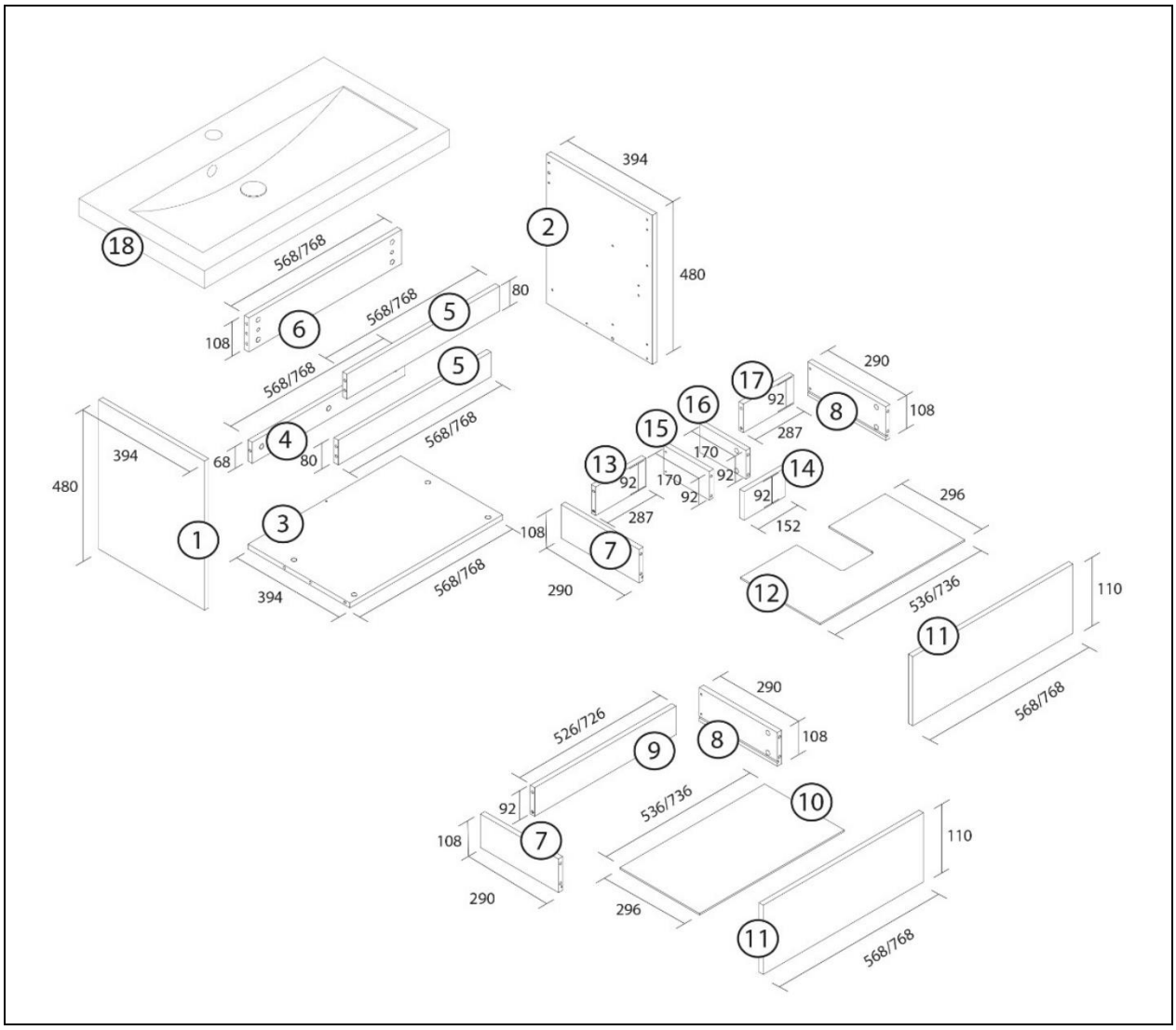

No.	Description of the	Quantity
1	Left side panel	1
2	Side panel right	1
3	Floor	1
4	Back	1
5	Front	2
6	Back hanger	1
7	Frame left	2
8	Frame right	2
9	Drawer back panel	1
10	Drawer bottom	1
11	Drawer front	2
12	Drawer base cover	1
13	Wooden moulding rear left	1
14	Wooden moulding rear part front	1
15	Wooden moulding left	1
16	Wooden moulding right	1
17	Wooden moulding rear section right	1
18	Washbasin	1

Mirror

No.	Part	Quantity
a		2
b		2

No.	Part	Quantity
c	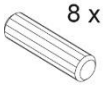	1
m	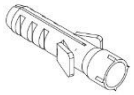	2

No.	Part	Quantity
n		2
o		4
p	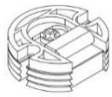	2

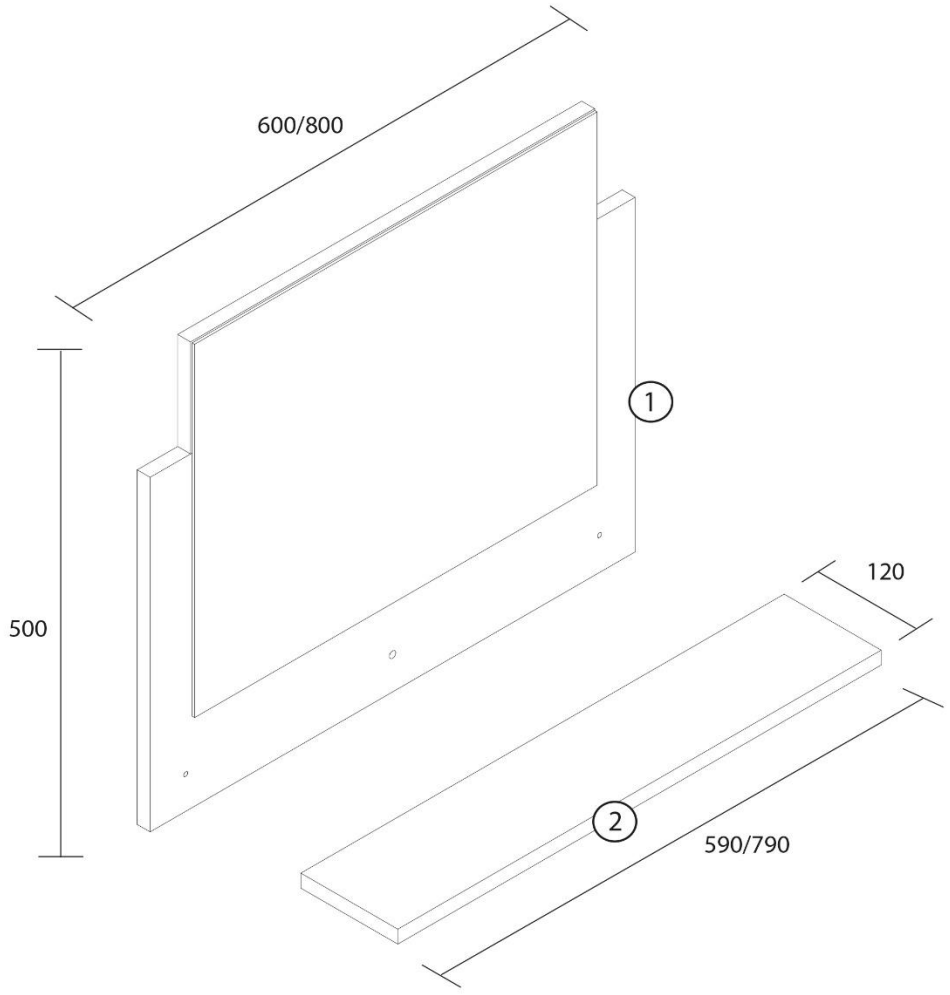

No.	Description of the	Quantity
1	Mirror	1

2	**Filing**	**1**

Wall unit (XL / BIG XL version)

No.	Part	Quantity
a		**34**
b	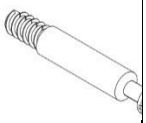	**34**
c	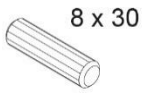	**12**
d		**16**

No.	Part	Quantity
g		**18**
q		**4**
r	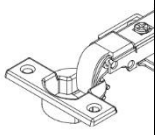	**6**
h	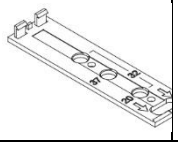	**3**

No.	Part	Quantity
i	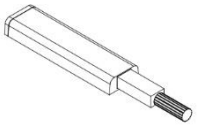	**3**
j		**3**
s	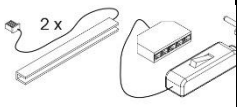	**1**

No.	Part	Quantity

No.	Part	Quantity

No.	Part	Quantity

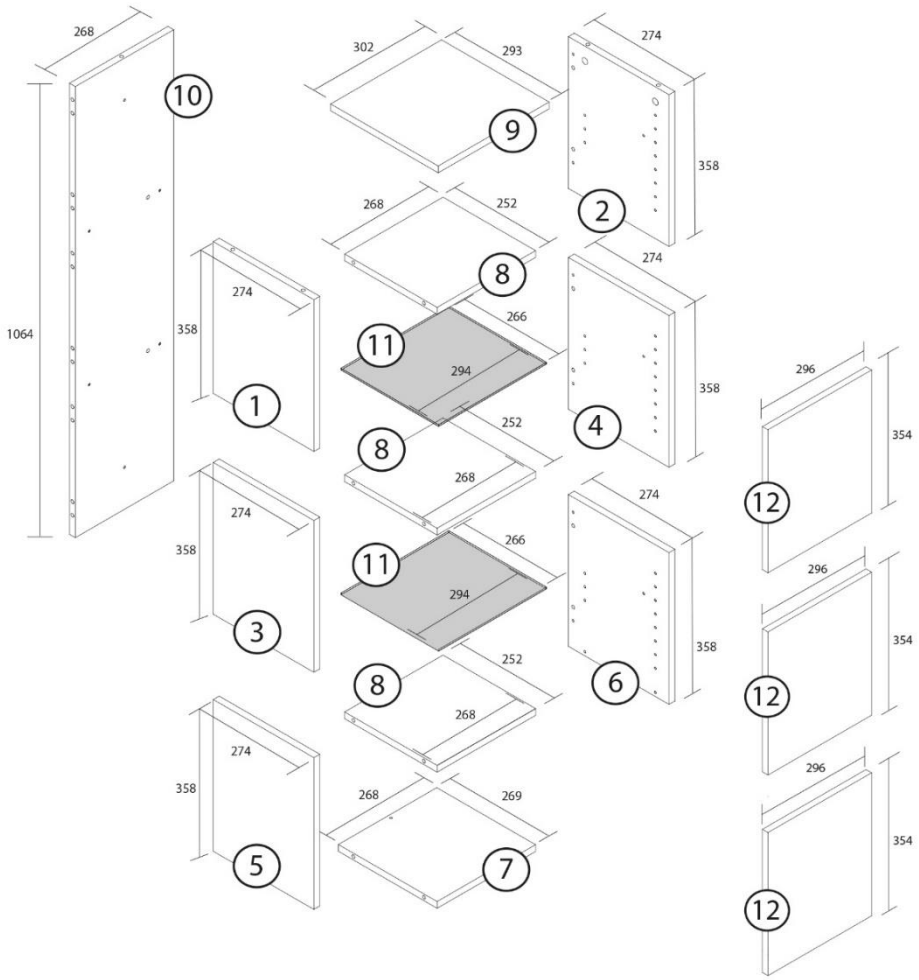

No.	Description of the	Quantity
1	Side panel top left	1 (2)
2	Side panel top right	1 (2)
3	Left centre side panel	1 (2)
4	Side panel right centre	1 (2)
5	Side panel bottom left	1 (2)
6	Side panel bottom right	1 (2)
7	Bottom floor	1 (2)

8	**Shelf**	**3 (6)**
9	**Top floor**	**1 (2)**
10	**Back panel**	**1 (2)**
11	**Glass bottom**	**2 (4)**
12	**Door**	**3 (6)**

5. Assembly

Installation site

- Before installing the product on the wall, check that it can withstand the load permanently.
- When drilling into the wall, make sure that no pipes (cables or water pipes etc.) are damaged.

5.1. Safety instructions

All health and safety information must be read.

Risk of injury
Improper handling during installation can lead to injuries

- Your product will be delivered in several parcels. Please make sure that the parcels are opened at the top. Be very careful when opening the parcels as there are fragile parts and glass in the parcels.
- Before installing the product on the wall, check that it can withstand the load permanently.
- Use the correct fixing material (screws and wall plugs) for wall mounting.
- Always observe the mounting dimensions and use the mounting material supplied.
- Operating errors, assembly errors or damage caused by assembly are excluded from the warranty.
- At least 2 people are required to assemble the product.
- Wear protective clothing such as safety shoes and protective gloves during assembly.

5.2. Structure of the product

The product is delivered disassembled and can be assembled with little effort. Follow the assembly instructions carefully. The function and safety of the product cannot be guaranteed if the instructions are not followed. Before starting assembly, familiarise yourself with the fittings and fastening elements for easier use during assembly.

Tools required

	Screwdriver		Measuring tape
	Drill Ø6 mm	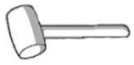	Rubber mallet
	Drilling machine		Cutter knife
	Spirit level		Pencil

- The following instructions must be read carefully.

Assembly of base cabinet (all versions)

Step 1: Screw in the furniture connectors

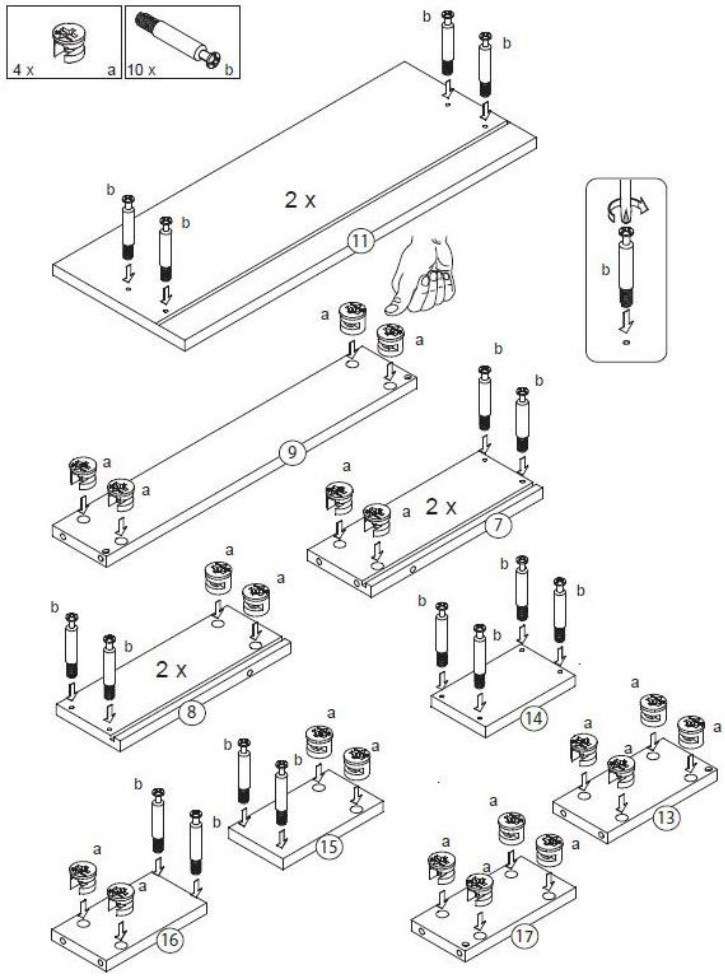

Step 2: Fasten the frames (7, 8) and drawer back (9)

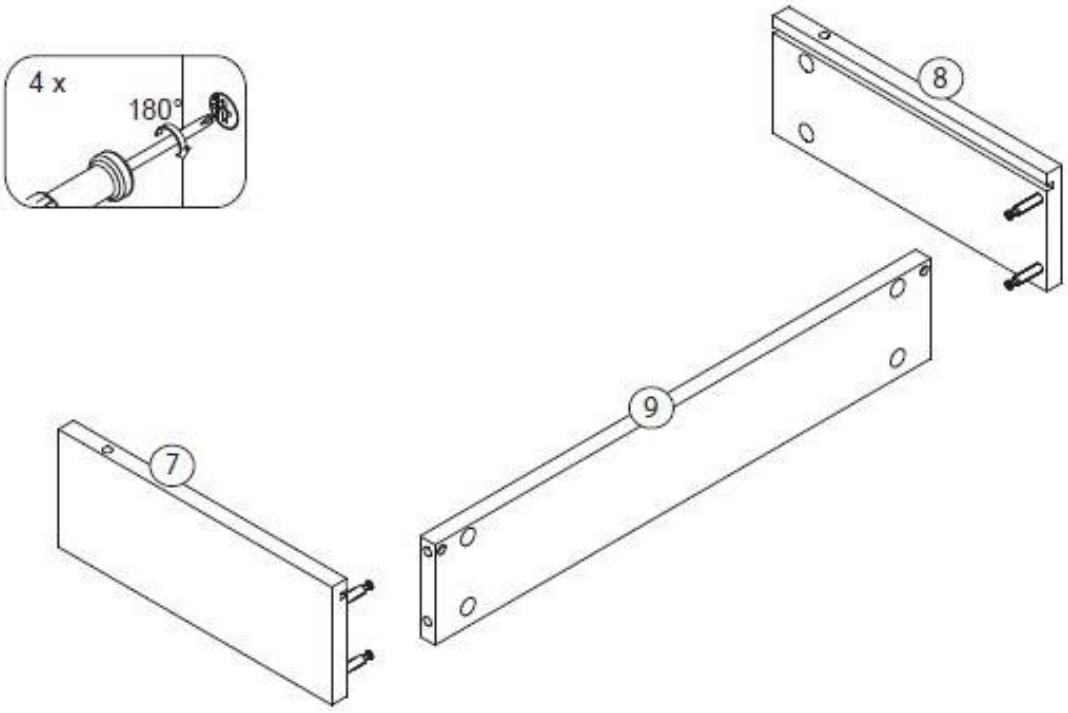

Step 3: Fastening the drawer front (11) and frames (7, 8)

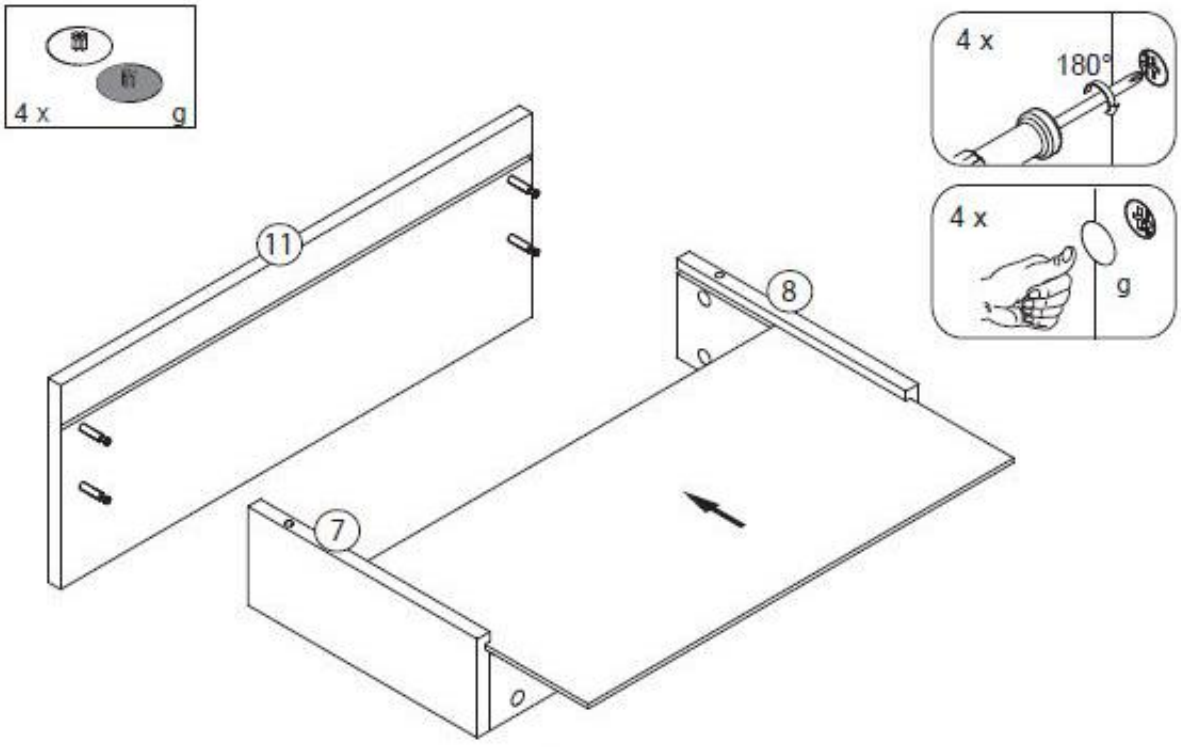

Step 4: Fasten the screws

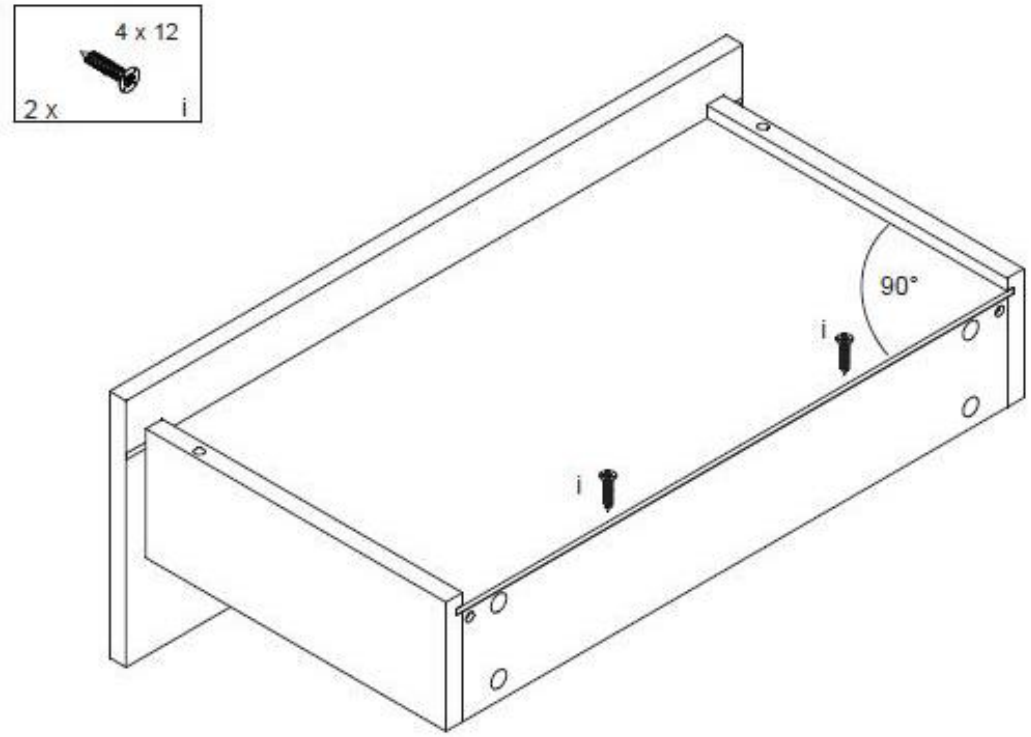

Step 5: Attach all components

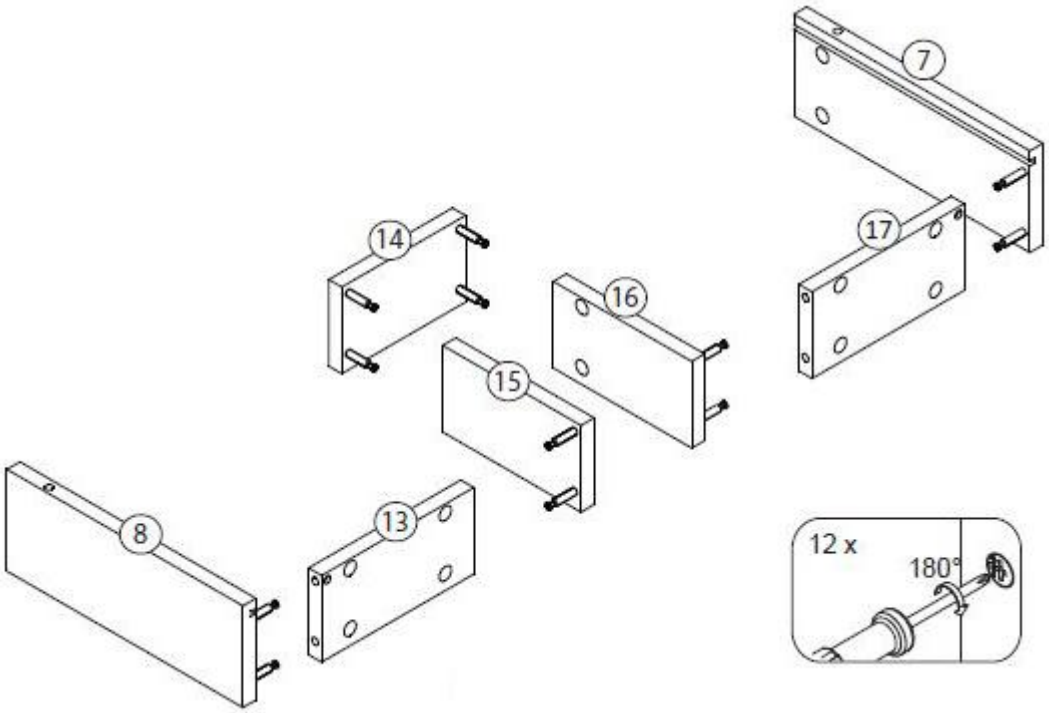

Step 6: Slide in and secure drawer base cover (12)

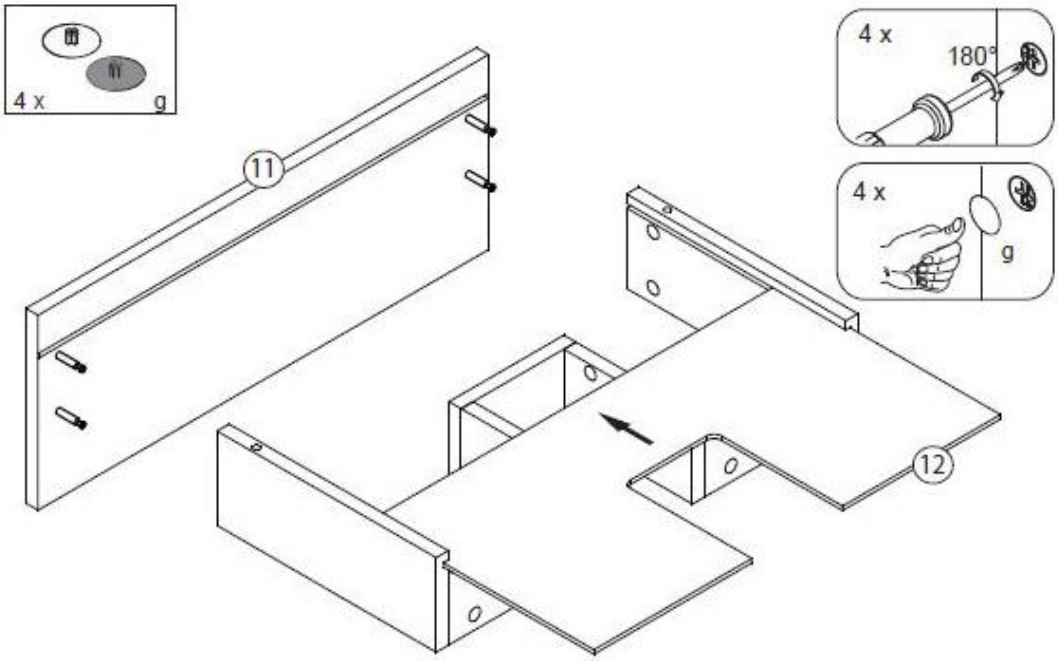

Step 7: Fasten with the screws (i)

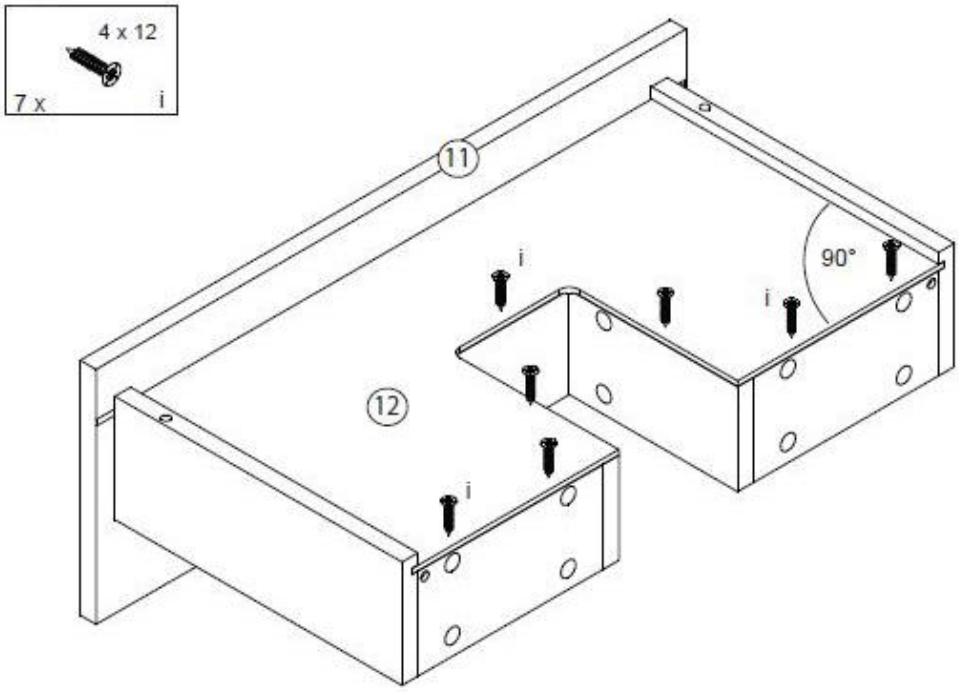

Step 8: Screw in the furniture connectors

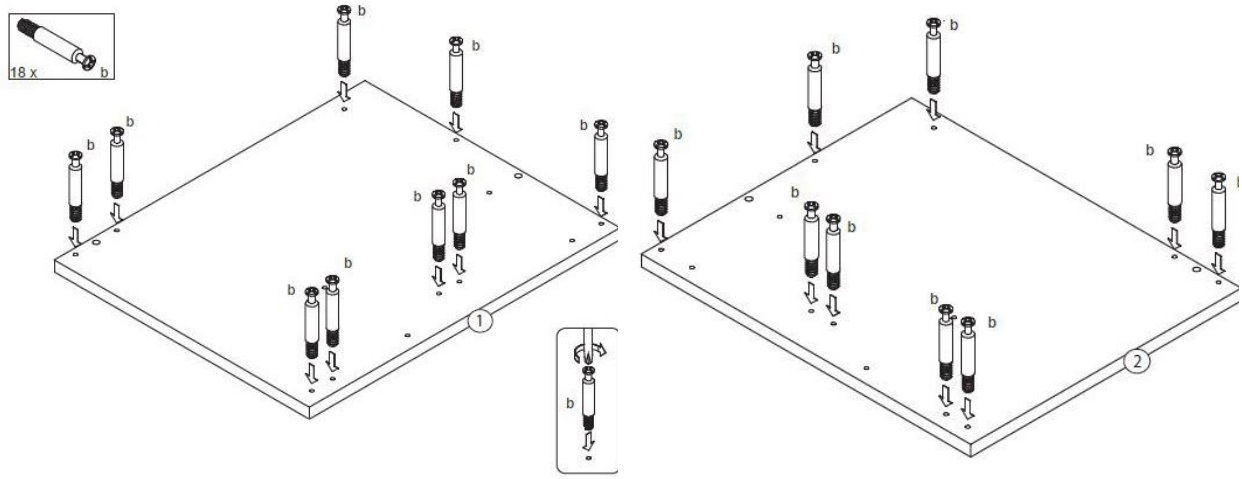

Step 9: Screw in/push in dowels and furniture connectors

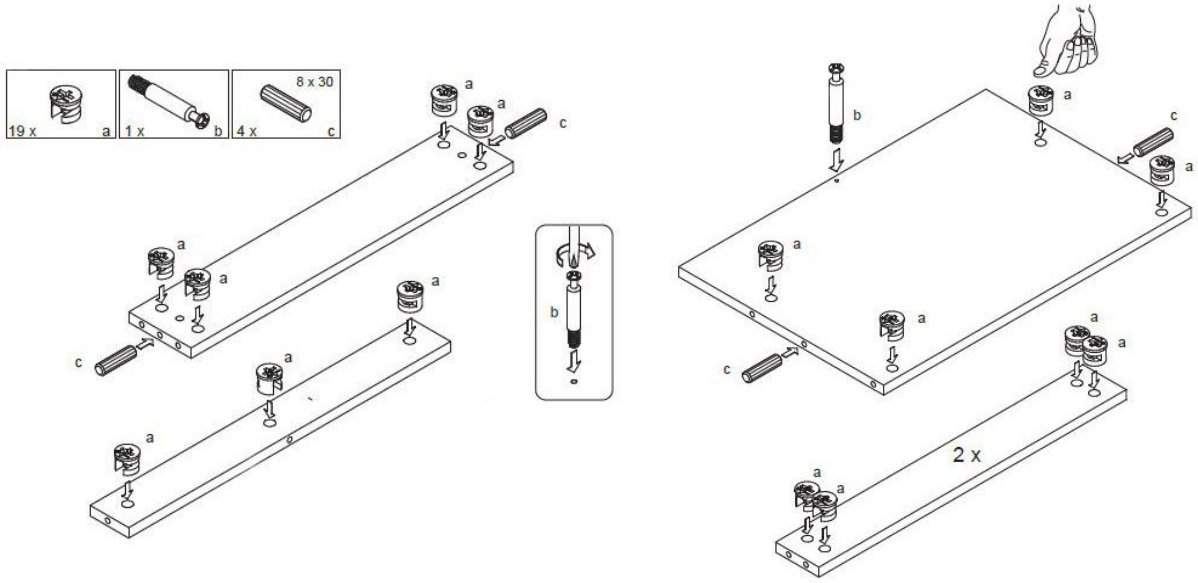

Step 10: Fasten the back (4) and base (3)

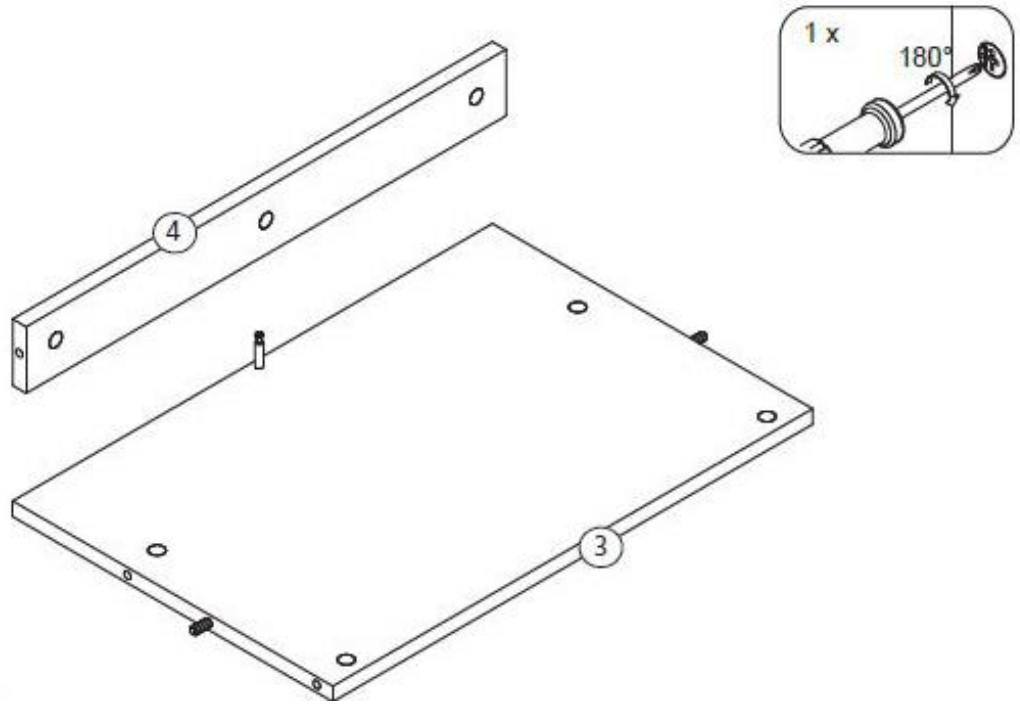

Step 11: Attach all components

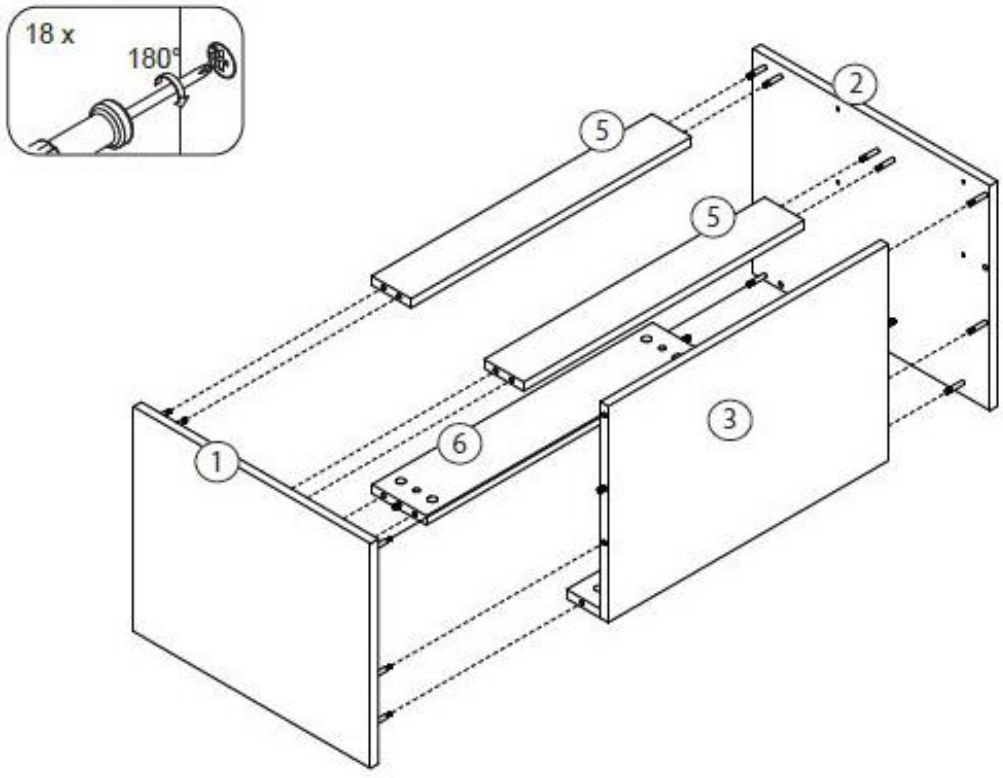

Step 12: Fitting and adjusting the hinge

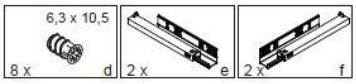

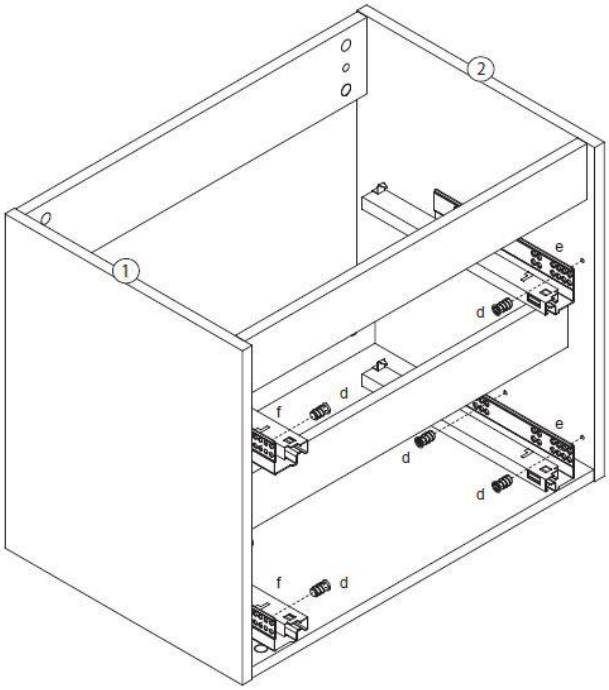

Step 13: Fastening the hinge with the corner bracket and screws

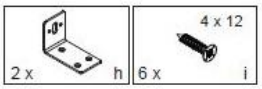

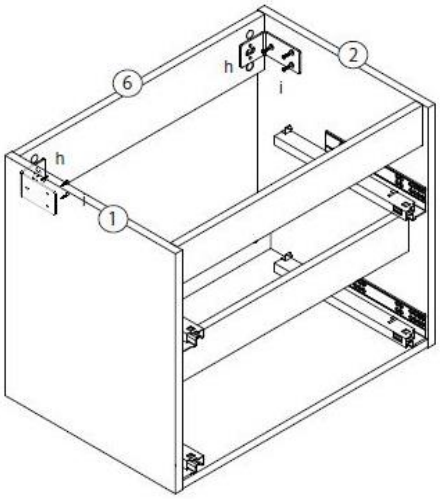

Step 14: Installing the base cabinet on the wall

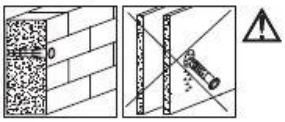

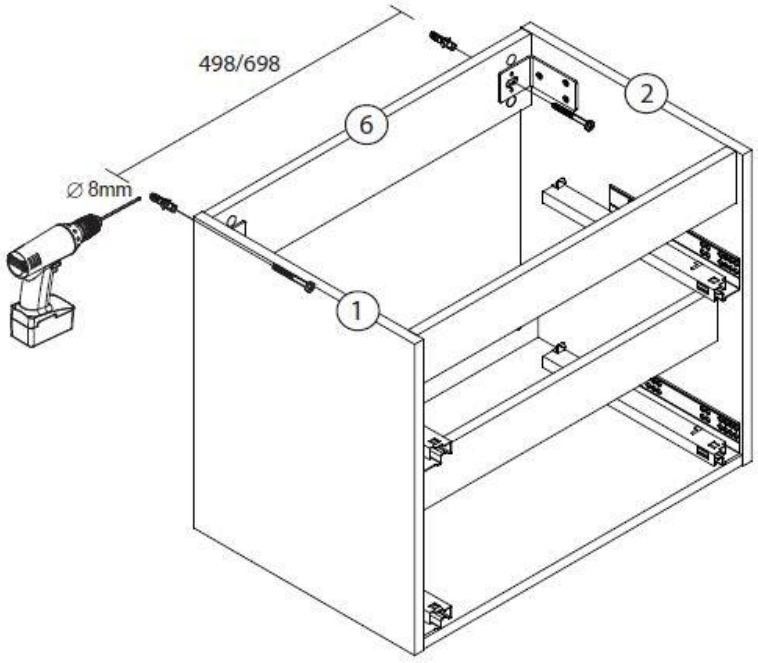

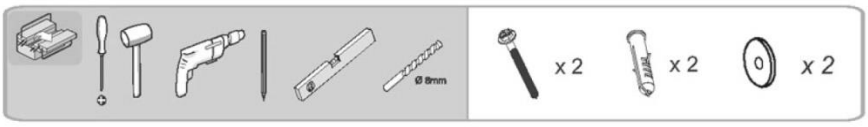

Version: S
M
L
XL

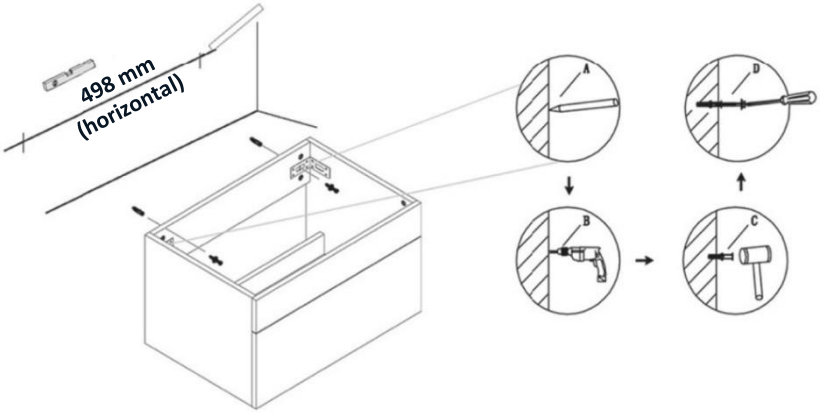

Version: BIG S
BIG M
BIG L
BIG XL

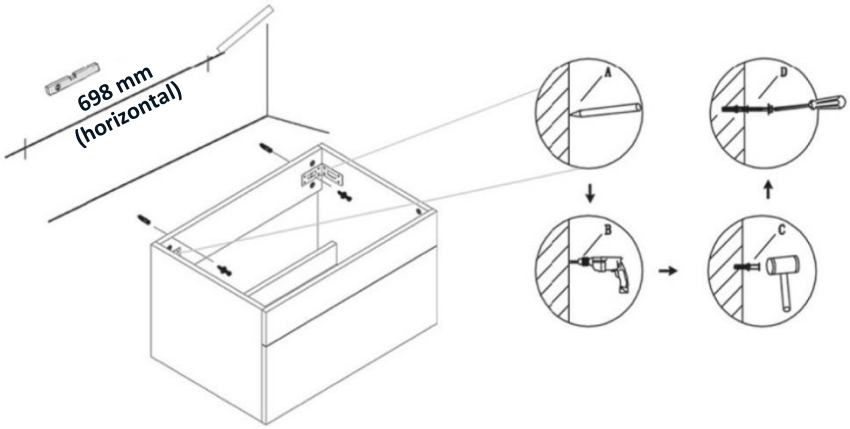

Step 16: Insert the drawers and secure with the screws (i)

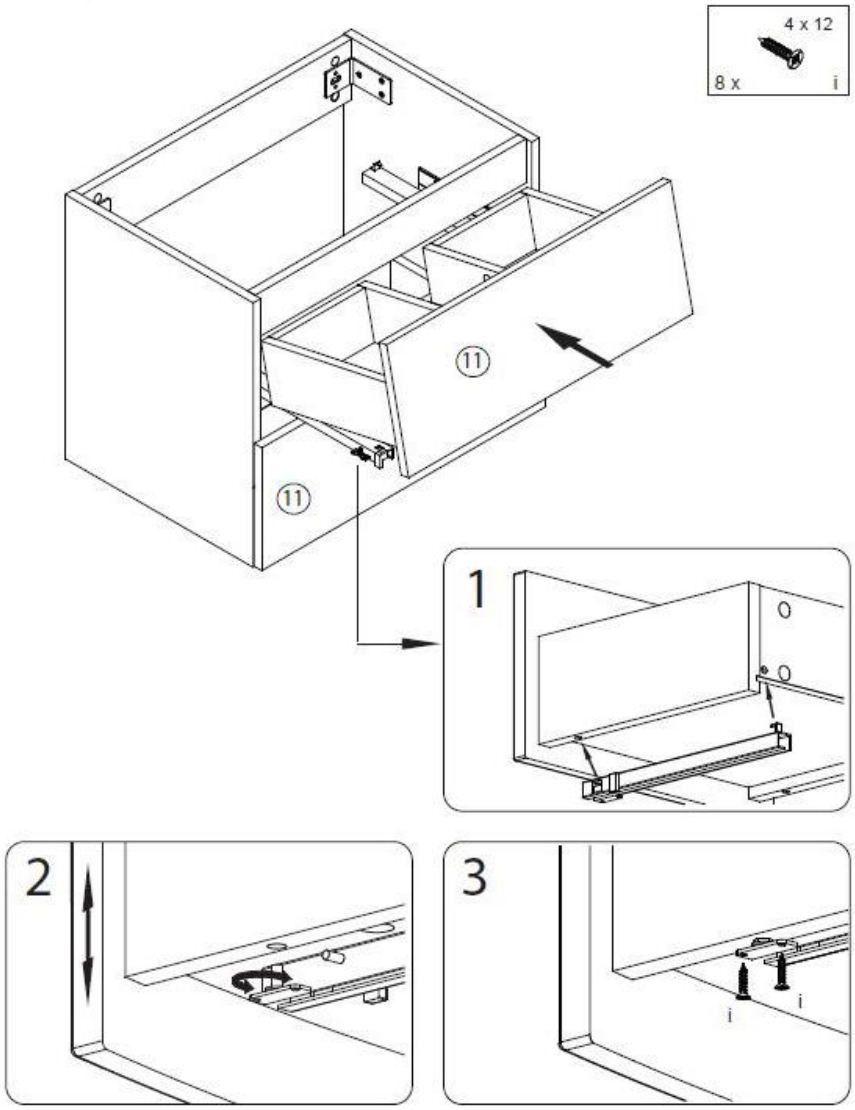
4 x 12
8 x
i
11
11
1
2
3
i
i

Step 17: Installing the washbasin

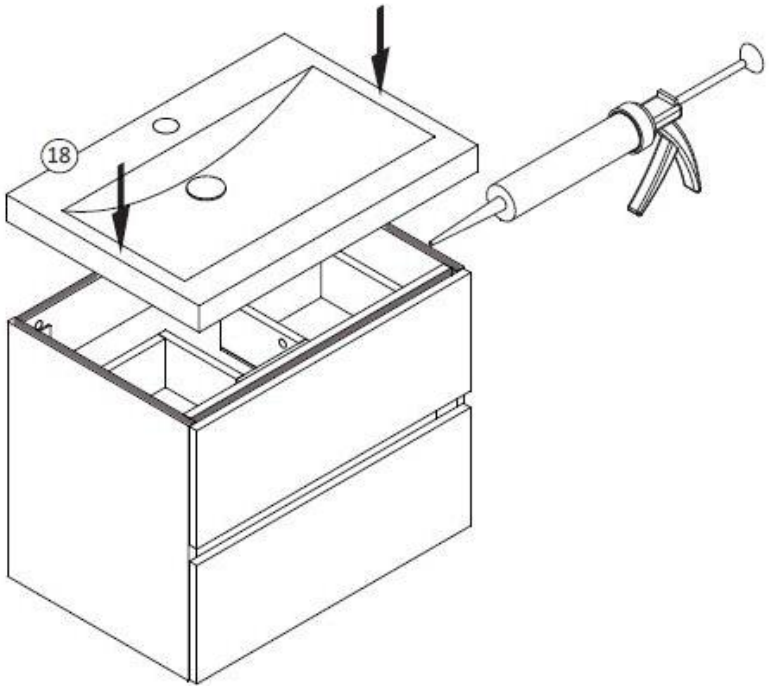

Place the washbasin on the vanity unit and seal or glue it to the wall with silicone.
The tap and drain are not included in the scope of delivery and can be purchased from specialist retailers.

Mounting mirror (version: M / L / XL / BIG M / BIG L / BIG XL)

Version: M
L
XL

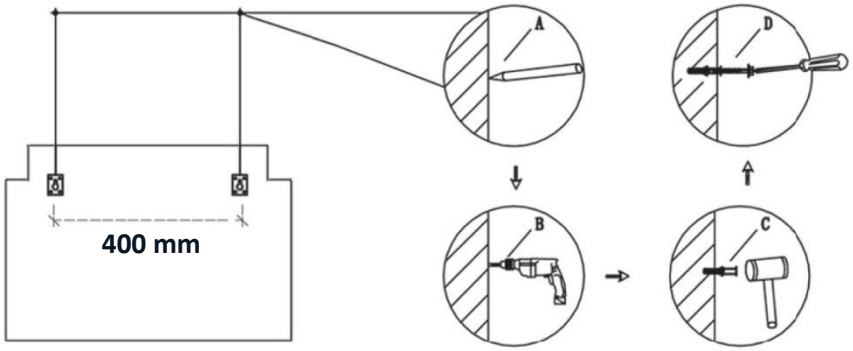

Version: BIG M
BIG L
BIG XL

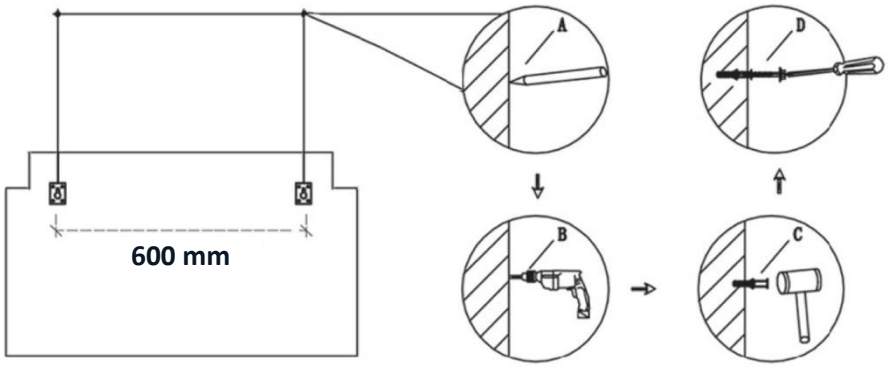

Version: M / BIG M
L / BIG L
XL / BIG XL

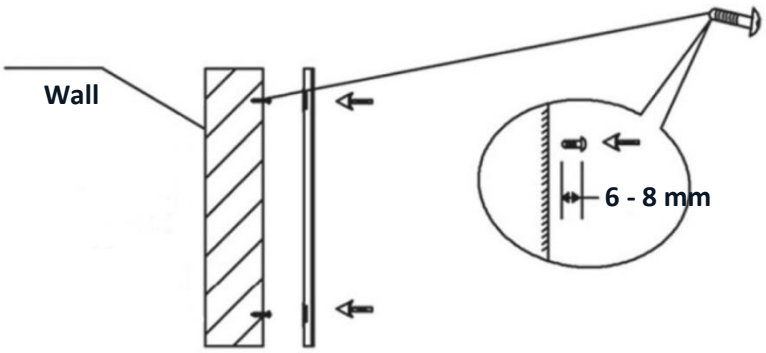

Step 1: Insert and fasten the furniture connectors and dowels

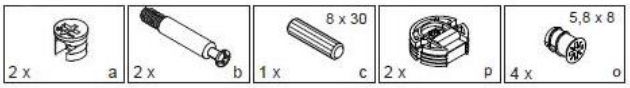

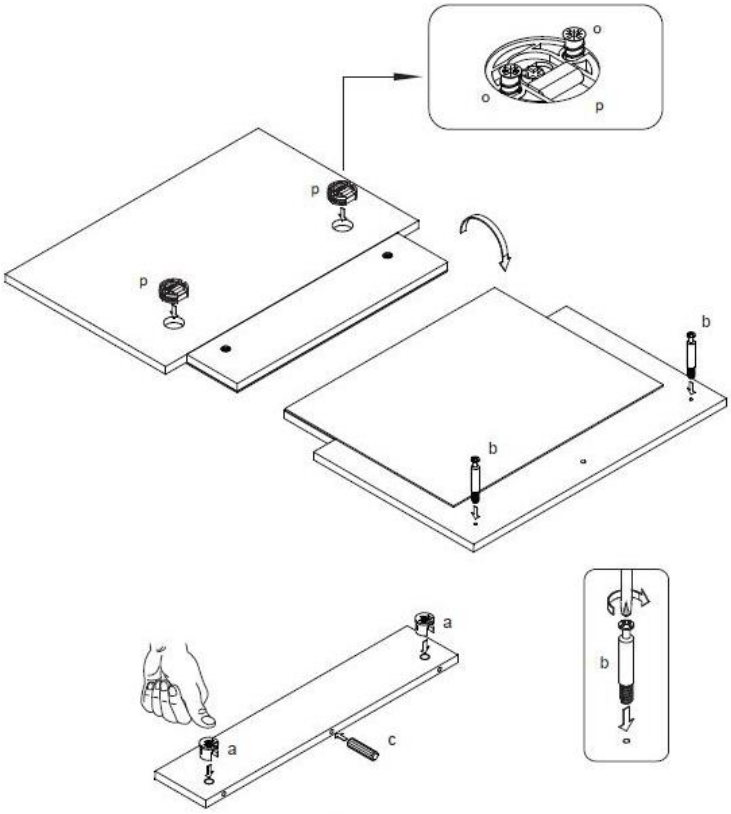

Step 2: Attach the shelf (2)

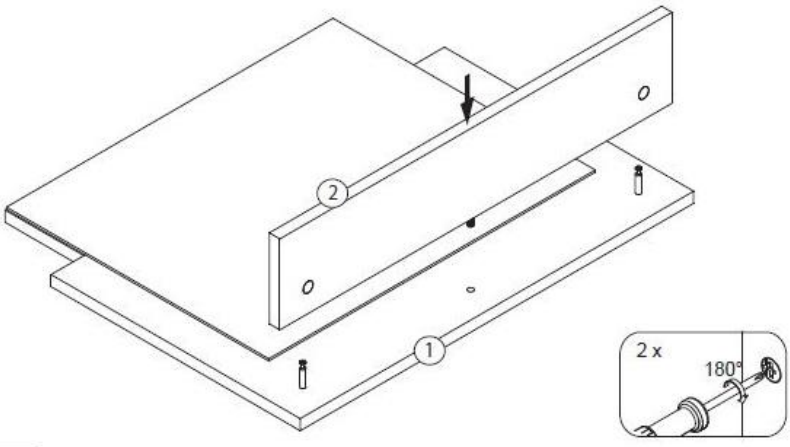

Step 3: Fastening the mirror to the wall

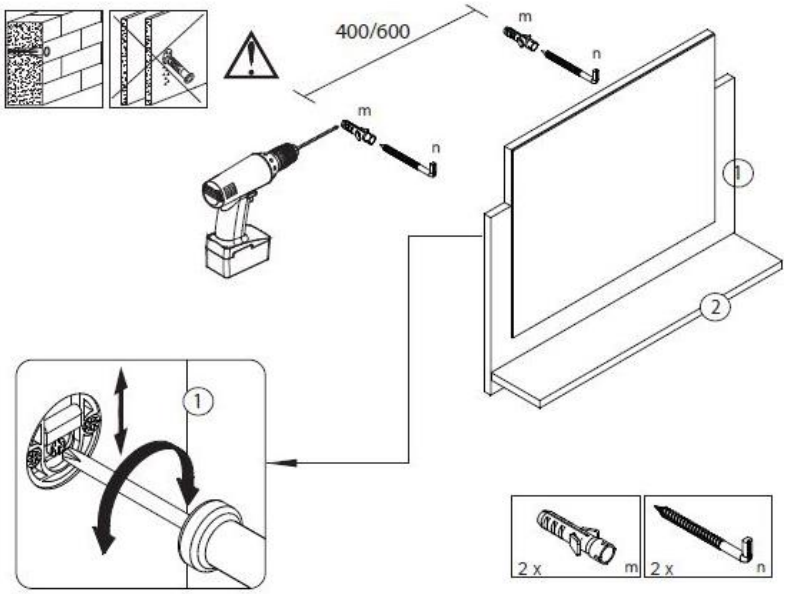

Wall unit assembly (version: L / XL / BIG L / BIG XL)

Step 1: Screw in the furniture connectors

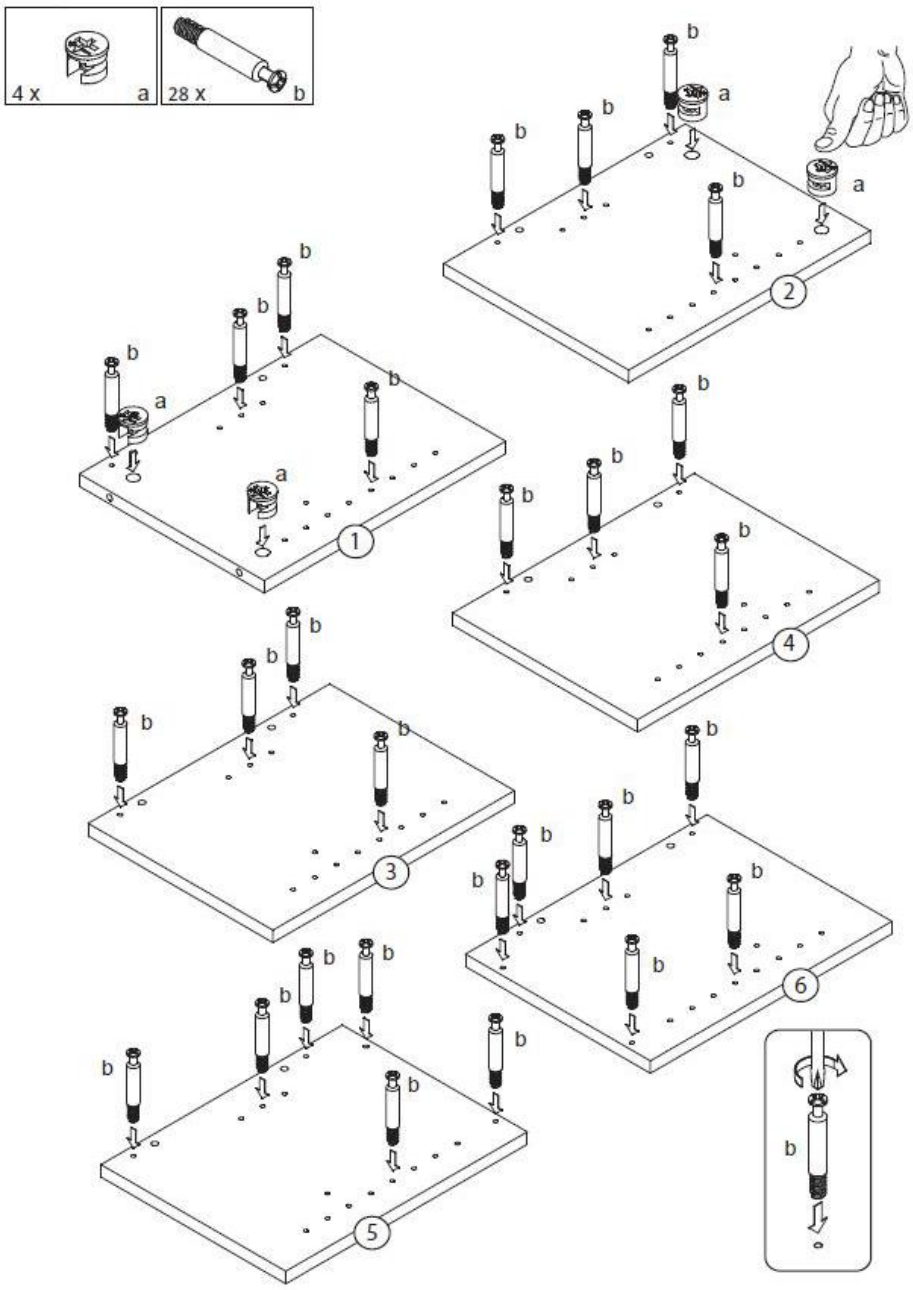

Step 2: Insert furniture connectors, wooden dowels

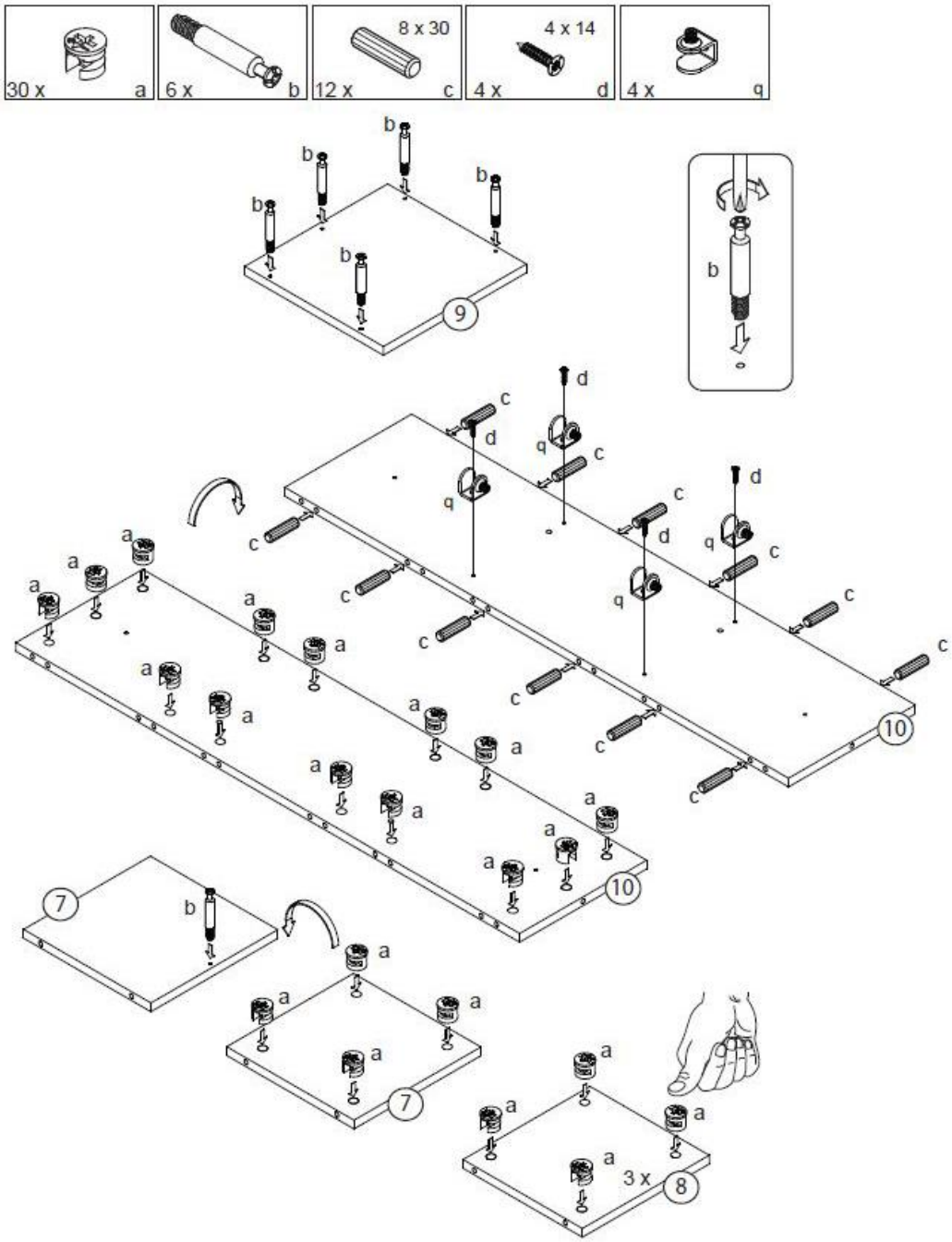

Step 3: Adjusting and fitting the rails on the door (12)

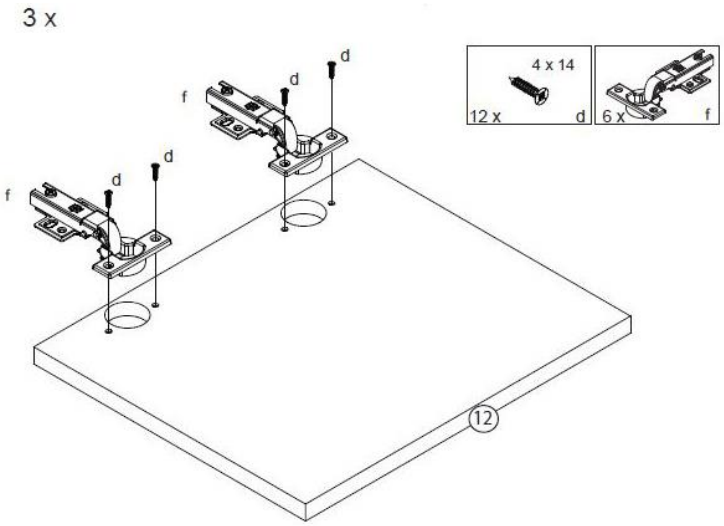

Step 4: Attach the lower shelf (7) to the rear panel (10)

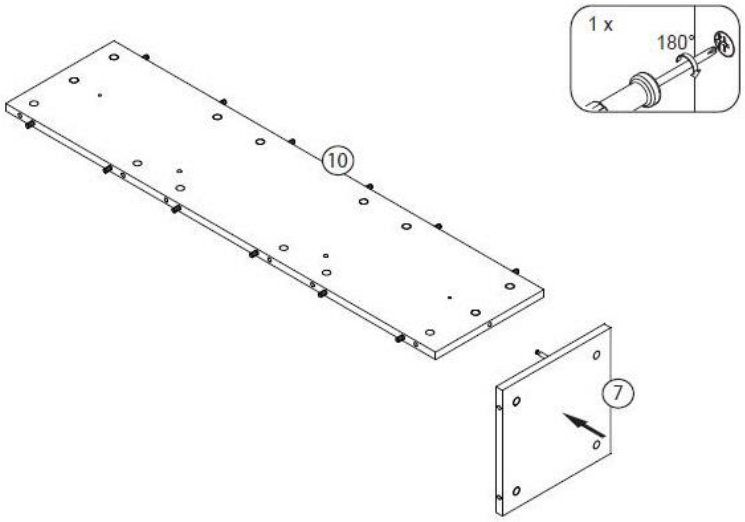

Step 5: Attach all components

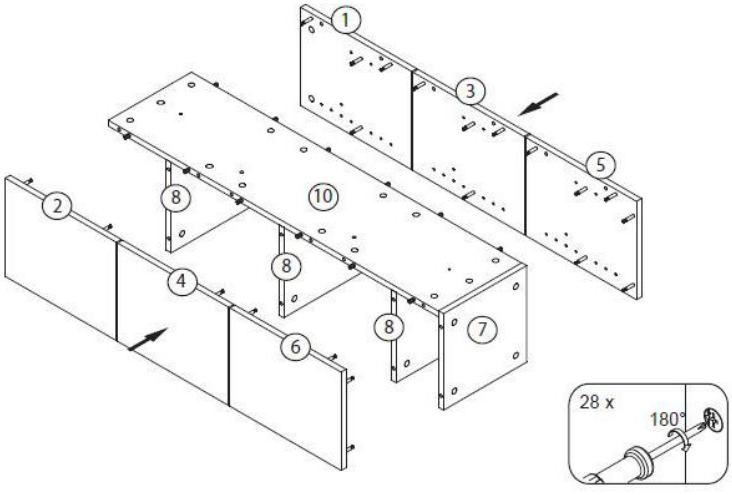

Step 6: Insert and secure the top shelf (9)

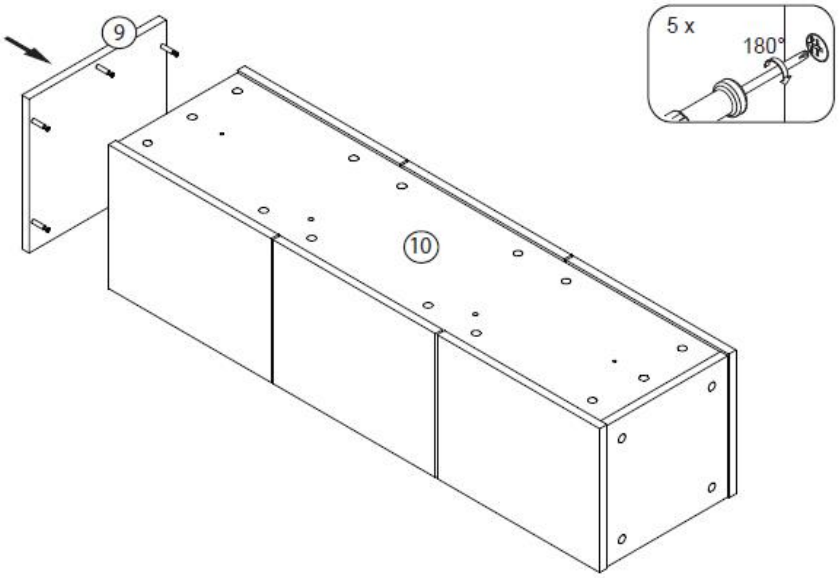

Step 7: Insert glass base(11)

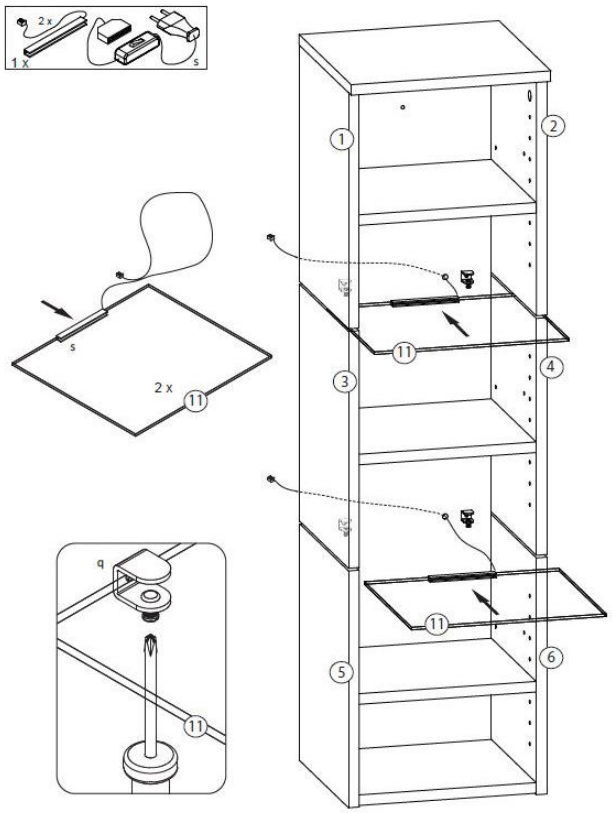

Step 8: Fastening the wall cabinet to the wall

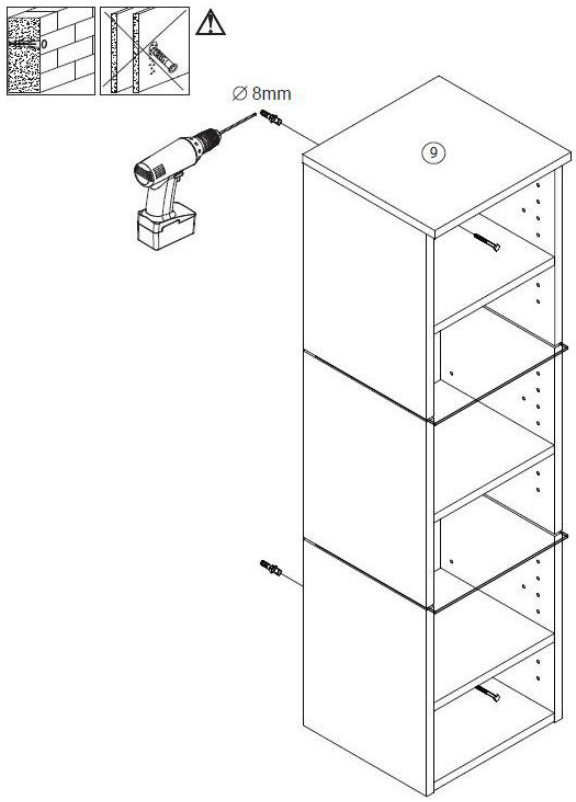

Make sure that the wall on site can permanently withstand the load from the wall cabinet

Step 9: Adjusting and fitting the rails

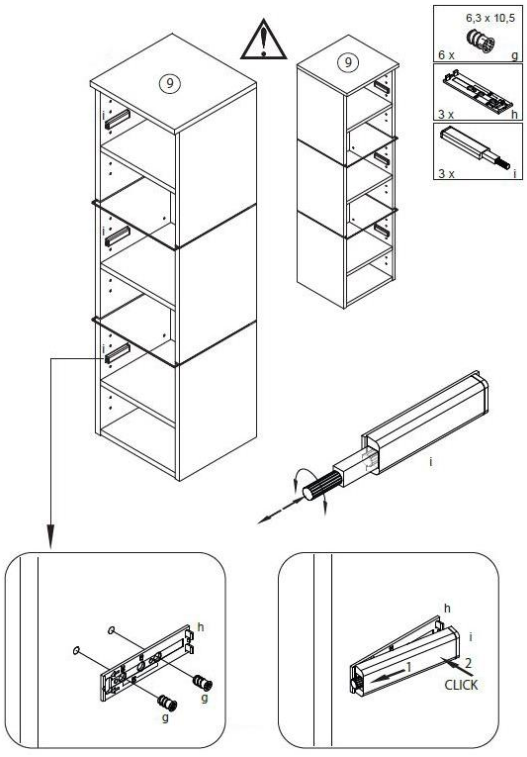

Step 10: Adjusting and fitting the cabinet rails

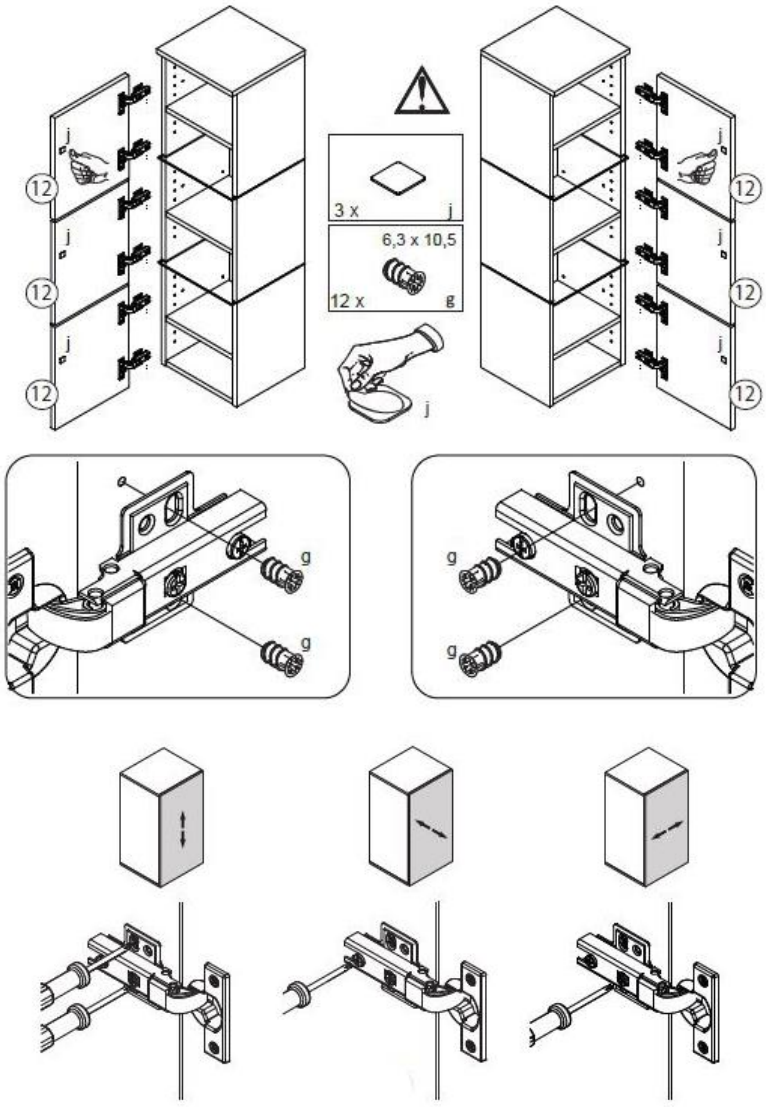

6. Application

6.1. Safety instructions

The following health and safety information must be read carefully.

Risk of injury
Improper handling during operation can lead to injuries



- Do not use a damaged product.
- Do not make any changes to the product.
- **Danger of falling!** The product is not a children's toy, climbing wall or sports equipment. The individual elements of the product can fall off the wall if loaded on one side, which can result in death.
- Check the fastening at regular intervals.

6.2. Initial commissioning

Check the product for damage before using it for the first time and check the wall mounting to ensure that the product is securely attached and does not wobble. The product may only be used if it is undamaged, firmly attached and does not wobble.

6.3. Operation

Check before using the product.

- the proper condition.
- the electrical connection.
- the damper of the base unit.
- the function of the LEDs.

6.4. Control element

To operate the LED light strip, the plug must be inserted into the power supply.
The light is switched via the on/off switch in the supply cable.

7. Troubleshooting

If the following faults occur during operation, please check the following fault causes using the following table. If the fault cannot be rectified by the measures listed, take the product out of operation.

Error	Possible cause	Solution
The product wobbles or vibrates	- The fastening screws have come loose - The product is overloaded - The wall is not stable	- Tighten the fastening screws - Comply with load limits - Stop using the point
The doors or front flap are crooked and do not close properly	- The hinges are not adjusted correctly	- Adjust hinges correctly
LED light does not work	- No mains voltage - The plug is not in the socket - The plug connection of the supply cable to the LED strip is loose - Power supply unit defective	- Check the fuse or RCD of the power supply - Main switch of the power supply is off - Insert the plug into the socket - Plug the connector together - Replace power supply unit

If another problem occurs with the product, please contact us.

8. Maintenance and care

8.1. Safety instructions

Risk of injury
Improper handling during operation can lead to injuries



- Switch off the power supply to the product before cleaning/maintenance/care.

Clean the surfaces with a damp cloth and a mild detergent. Do not use aggressive cleaning agents or high-pressure cleaners for cleaning. Also follow the cleaning agent manufacturer's instructions.

9. Dismantling

9.1. Safety instructions

Risk of injury
Improper handling during disassembly can lead to injuries



- Disconnect the product from the power supply before dismantling. Contact with live components can result in an electric shock, which can cause burns or death.
- Dismantling should be carried out by at least 2 people.
- Secure the product against falling before dismantling.

Disassembly of the product must be carried out in reverse order to assembly. (**see chapter Assembly**)

10. Disposal instructions



- Dispose of the product and all components in accordance with local and country-specific regulations to prevent damage to the environment.
- Our packaging is made from environmentally friendly materials. They can be recycled and thus serve as valuable raw materials. Dispose of the packaging material (cardboard, dirty packaging, etc.) separately and professionally in accordance with the applicable national regulations.
- Contact the manufacturer if you are unsure about disposal.
- You can also obtain information on proper disposal from the local waste disposal centres

11. Electrical and electronic equipment - Information for private households

The Electrical and Electronic Equipment Act (ElektroG) contains a large number of requirements for the handling of electrical and electronic equipment. The most important ones are summarised here.

1. Separate collection of old appliances

Electrical and electronic appliances that have become waste are referred to as old appliances. Owners of old appliances must dispose of them separately from unsorted municipal waste. They must separate used batteries and accumulators that are not enclosed in the old appliance, as well as lamps that can be removed from the old appliance without destroying them, from the old appliance without destroying them before handing them in at a collection point. Separate old appliances in order to prepare them for reuse.

2. Options for returning old appliances

Owners of old appliances from private households can hand them in at the collection centres of the public waste disposal authorities or at the take-back centres set up by manufacturers or distributors in accordance with the ElektroG. An online list of collection and take-back centres can be found on the website: https://www.stiftung-ear.de or https://www.take-e-back.de.

3. Data protection notice

Old devices often contain sensitive personal data. This applies in particular to information and telecommunications technology devices such as computers and smartphones. In your own interest, please note that each end user is responsible for deleting the data on the old devices to be disposed of.

4. Take-back obligation of distributors

Distributors with a sales area for electrical and electronic equipment of at least 400 m2 and distributors of foodstuffs with a total sales area of at least 800 m2 who offer and make available electrical and electronic equipment on the market several times a calendar year or on a permanent basis are obliged to do so,

- when supplying a new electrical or electronic appliance to an end user, to take back free of charge at the place of supply or in the immediate vicinity an old appliance of the end user of the same type that essentially fulfils the same functions as the new appliance, and
- at the end user's request, to take back waste electrical and electronic equipment that does not exceed 25 cm in any external dimension free of charge in the retail shop or in the immediate vicinity; the take-back may not be linked to the purchase of an electrical or electronic appliance and is limited to three waste appliances per type of appliance.

5. Meaning of the "crossed-out wheelie bin" symbol



The symbol of a crossed-out dustbin regularly shown on electrical and electronic appliances indicates that the appliance in question must be collected separately from unsorted municipal waste at the end of its service life.

- Manufacturer registration number
- We are registered as a manufacturer within the meaning of the ElektroG with the responsible foundation Elektro-Altgeräte Register (Nordostpark 72, 90411 Nuremberg) under the following registration number: WEEE reg. no. DE86467979

Home Deluxe GmbH
Schanzeweg 2
32312 Lübbecke
Germany
Tel: +49 (0)5743 6181-0
www.home-deluxe-gmbh.de

GA-201-00_WANGEROOGE_Deluxe